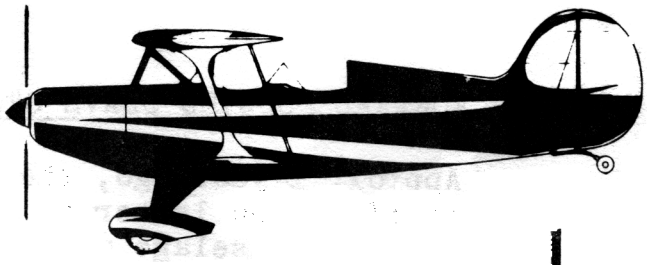

SKYBOLT NEWS

910 S. HoHoKam DR. BLDG. 107
TEMPE, ARIZ. 85281
602-968-2556

APRIL 1977

TO:

BALL BEARING BELLCRANKS FOR THE AILERONS

On page 11 of the March issue of Skybolt News we left you hanging with an un-finished sentence in the first paragraph. The sentence starts out "For ball bearings we use....." The finish to this sentence is..... Z99R4 shielded bearings. Add this same bearing number to the drawing in Fig. 17 on page 12. We have these in stock if you experience trouble buying them locally. The price is $5.25 ea. The Mfg'r. of the bearing is New Departure Hyatt.

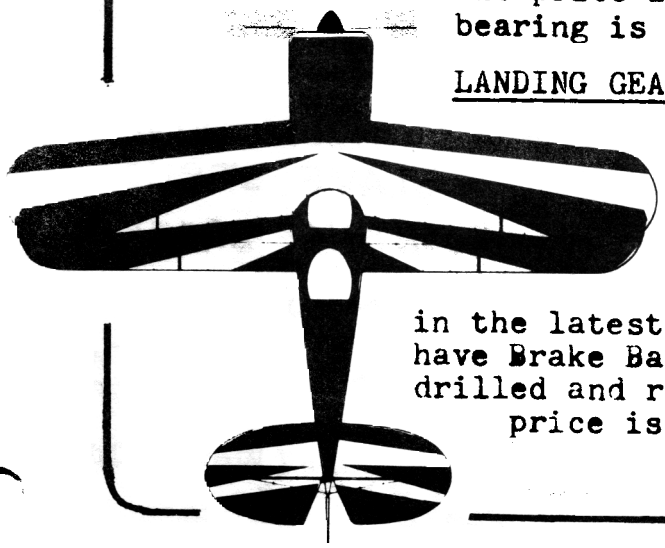

LANDING GEAR AXLES We also have in stock, threaded, centerless ground axles @ $20 each. The thread is 1½"-16. Tubular or hex type nuts are available from Aircraft Spruce and Specialty Co. Box424 Fullerton, Calif. 92632 Price in the latest catalog is $3.75 each. We also have Brake Backing Plates in stock. They are drilled and ready to weld to the axle. The price is $3.50 each.

FORWARD MOUNTED SLAVE STRUT BRACKETS

Approx. 1 year ago, the Skybolt designer sent out a modification letter to all plans holders. It included not only fuselage mods but a separate sheet with the drawing of the forward slave strut brackets and associated parts. Unfortunately there is a lot of missing information regarding this modification. "A" even though the material for the aluminum bracket is specified, it does not give the radius of the 2 bends and they are 3/8" minimum. "B" The angle of the bracket in relation to the front face of the aileron spar. This is 63° degrees, as shown in Fig.1 "C" The off-set in the bend of the bracket is not shown and this is 13/16" as shown in Fig.2 If the off-set is any less, there will not be enough clearance between the bracket ass'y. and the forward portion of the aileron hinge that mounts on the rear wing spar. "D" The drawing does not show the grain of the metal from which the slave strut bracket is made. See Fig.1 "E" No mention is made of the method used to bend the off-set in the alum bracket. If you have already made your alum. slave strut brackets and you bent them from 2024-T3 without first annealing the aluminum to O temper, we suggest that you invest in a Dye-Check Kit and check your brackets for cracks. It is virtually impossible to bend them from tempered aluminum without cracking them. We anneal our material after cutting out the brackets. After the brackets have been bent, we send them back to the Heat Treat Shop for re-tempering to 2024-T4 "F" Last but not least is the dimension shown in the designers drawing between the 2 lower holes. The drawing shows 2 11/16". This dimension should be 2½". After the bracket has been properly bent, the dimension will change to 2 5/16" This will assure proper clearance between the tip of the bracket and the aft face of the rear wing spar.

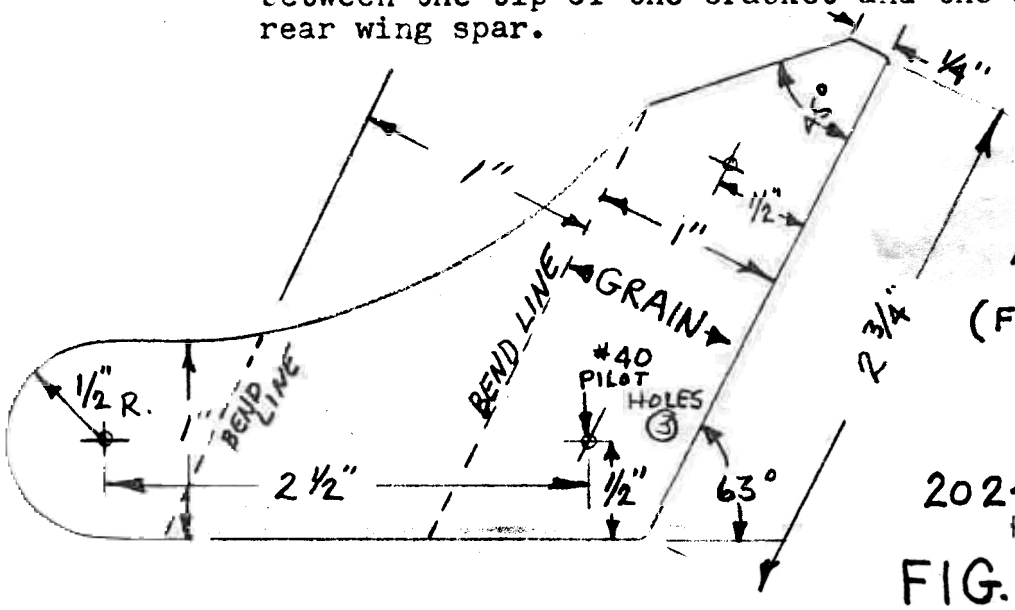

ALUMINUM SLAVE STRUT MOUNTING BRACKET

(FLAT LAYOUT SHOWN)

4 REQ'D (2 LEFTHAND, 2 RIGHTHAND) WHEN BENT

2024-T3 x 1/4" PLATE

FIG. 1

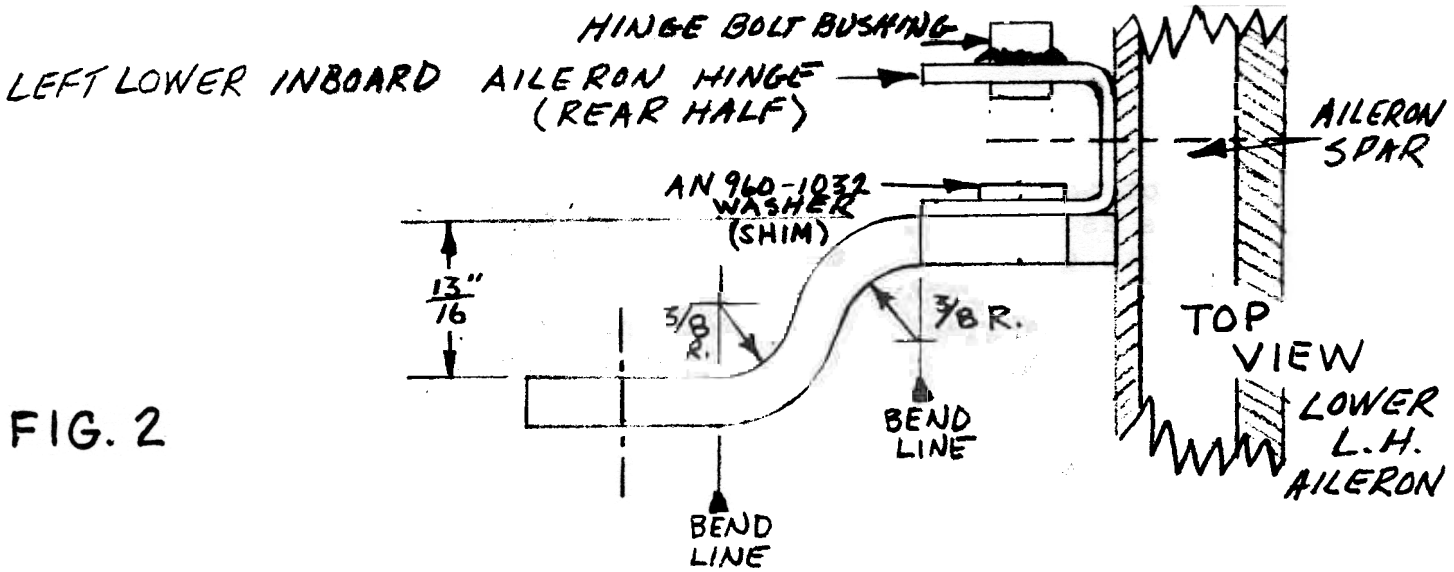

FIG. 2

The modification letter fails to tell you that it is neccessary to make 2 righthand and 2 lefthand brackets. Just reverse the bends. The designers drawing also shows a .063-4130 steel bracket that bolts on the outside of the alum. slave strut bracket at the aileron hinge and is in turn bolted to the aileron spar. In order to install this steel bracket it is neccessary to move the nose rib of the aileron that is next to the bracket plus longer birch plates will be neccessary in that area. The reason for the steel bracket is to put the alum. slave strut bracket in double shear where it bolts to the rear half of the aileron. This is absolutely un-neccessary since the designer puts the the rod end bearing in single shear with an AN3 Bolt. Fasten the alum. slave strut bracket to the rear half of the aileron hinge with the AN3 hinge bolt (aileron hinge bolt) and one additional AN3 bolt in place of the 3/16" Rivet as suggested in the modification letter. Using 2 AN3 bolts to secure the alum. slave strut bracket to the rear half of the hinge, you can omit the 4130 steel bracket.

The slave strut brackets used on the lower wings require a ream fit for the AN3 bolt that secures the Rod End Bearing. The brackets for the upper ends of the slave struts require a light press fit of the KP3A Ball Bearings. The outside dia. of the Ball Bearing is .625 This fit should be made after the Slave Strut Bracket has been re-heat treated since it will be easier to machine a better fit in the harder material.

The designers modification letter and the Slave Strut drawings show that the Streamline Slave Struts have been replaced with Slave Struts made from 3/4" O.D. x .049 - 4130 Tubing. I see no reason for this change since the Streamlined Tubing can be adapted to the forward mounting position with just a slight amount of modification. This will be covered in the May issue of Skybolt News.

You will notice in Fig. 2 above that the Hinge Bolt Bushing is installed in the INBOARD side of the Inboard Aileron Hinge and we use a AN 960-1032 washer as a spacer shim between the Aileron Hinge Rod End Bearing and the Hinge itself.

It is not only neccessary to build the Alum. Slave Strut Brackets as Righthand and Lefthand sets, it is also necessary to construct the rear half of all the Inboard Aileron Hinges properly. The Alum. Slave Strut Brackets mount on the outboard side of the Lower Inboard Aileron Hinges and the inboard side of the Upper Inboard Aileron Hinges.

BUILDING THE CABANE STRUTS

Building the Cabane Struts is not the awesome job that a builder might think. In fact the Skybolt type of Cabane is rather simple and very strong. The hardest part of the job is the fitting of the tubing involved. Because we at Starfire are confronted with making many Cabane Strut Assemblies, our fixture is made of steel tubing and is also made to clamp on the top longerons. In the case of the homebuilder who is building only one assembly, the Fixture can be made out of Plywood and will be plenty accurate. Fig. 3 and Fig.4 shows how it is done.

Before we get into the building of the Cabanes, I want to share with you some thoughts on Streamline Tubing. More importantly the quality of same. There have been recent reports in the pages of Sport Aviation regarding cracks in the trailing edges of Streamline Tubing used in the Pitts Cabane Strut assembly. Recently one of our customers returned a 26" length of Streamline Tubing that he was about to use in his Skybolt. He had conducted a Dye Penetrant check of all the tubing we had sold him. The piece that he returned had failed to pass the Dye check and the indications were that it was cracked. After confirming what the customer had found by our own Dye check (we found 3 areas along the trailing edge) we subjected the sample to Magna-Flux testing and found no cracks. It has been determined that the sample of tubing actually was the victim of Die scuffing during manufacture. A small amount of metal on the surface was folded over as it passed through the Die thereby leaving a small area that would trap dye during a Dye Penetrant test. The point in this dissertation is that it is important to carefully inspect the material used in any part. If you should observe such a defect, use a fine file and carefully file down the suspected area to remove the scuffed metal and then re-apply the Dye Penetrant. If the crack persists, replace the piece in question or make an approved type of repair if the situation allows.

I think that most of you know that the plans are in error on Page 3 , Detail 1 and Detail 2 where it states that the centerline of the Cabane Bushings are paralell to the top longeron. The plans should be changed to show a positive angle

of 1½ degrees. Now that we have determined that all of our tubing is first rate and the angle of incidence is 1½ degrees, lets start by accurately building the Plywood frame or fixture if you prefer, as shown in Fig. 3 and 4. Measure the distance between the centerlines of the top longerons across the fuselage at the "O" Station and find the exact center of the fuselage. Using a chaulk line strike a line on top of the fuselage members between the "O" Station and the center of the tail post. This chaulk line will also be helpful in locating other parts, or droping a plumbob to the lower part of the fuselage. Make sure that the fuselage is level using the original leveling points that you have established for all leveling operations.

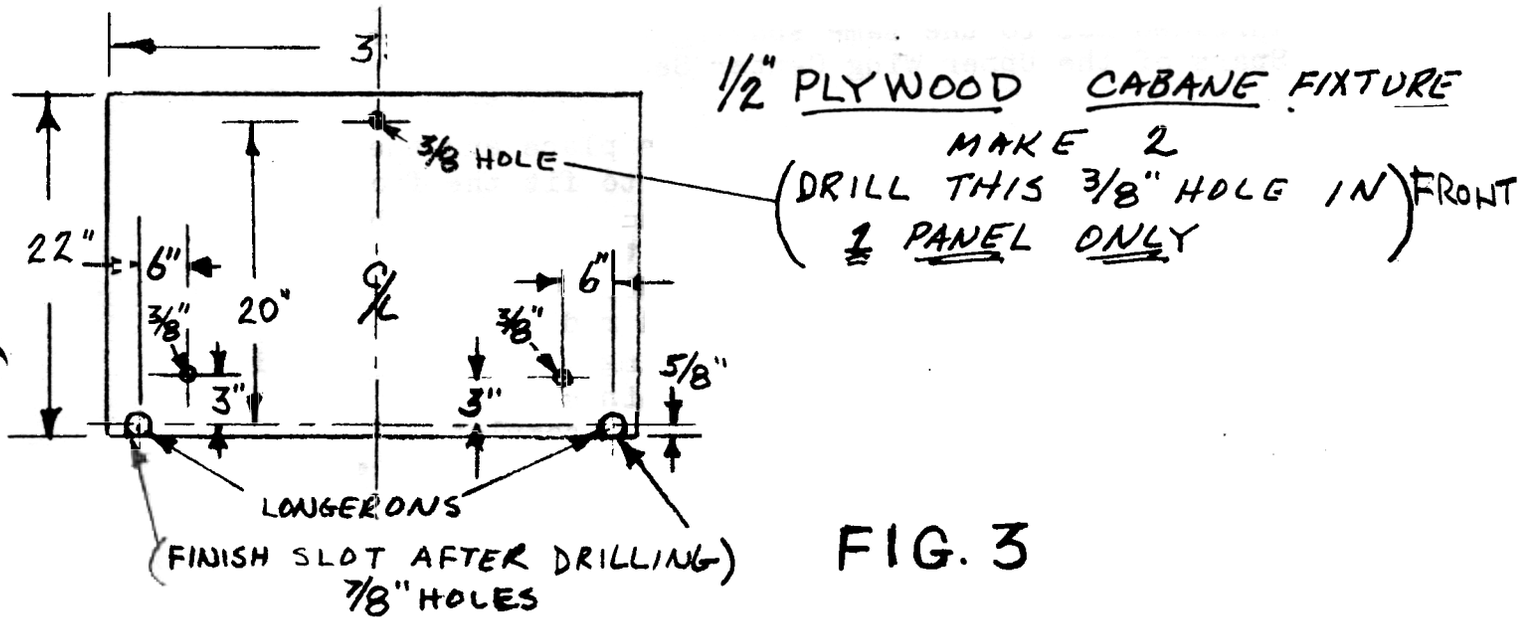

FIG. 3

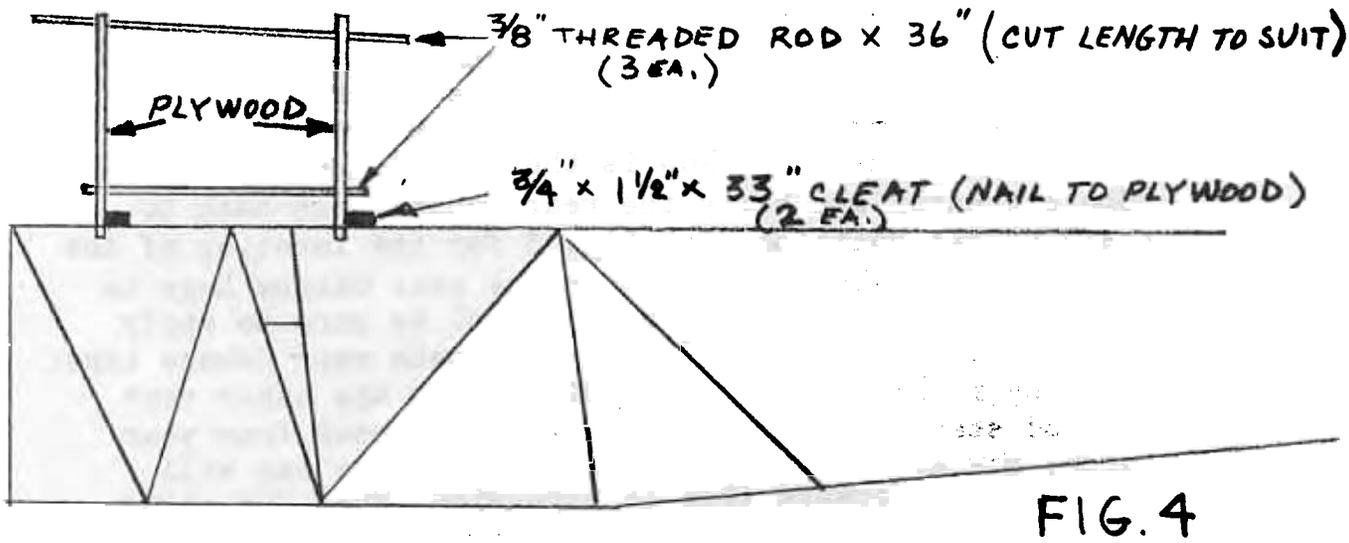

FIG. 4

By now I am sure that the Cabane Fixture is just about self explanatory but a few further comments are in order before we leave the subject. In Fig. 4 you will notice a 3/4" x 1½" x 33" Cleat nailed to the bottom of each piece of plywood. The Cleats provide a flange that we use to hold the plywood in place with Spring Clamps or "C" Clamps. Before you drill the 3/8" hole for the Threaded Rod in the rear piece of plywood we need to mark the center of the hole location. Take a piece of 3/8" tubing and put a pencil in the end of it. Insert this piece of tubing through the front hole. Using a Bubble Protractor on the tubing set the 1½ degrees and make a pencil mark on the rear plywood. Now drill the 3/8" hole in the rear plywood panel for the threaded rod. Using a piece of Treaded Rod, Jamb Nuts and Washers, space the ½" x .065 -4130 Bushings(Reamed to 3/8") on the Threaded Rod to the same spacing that you have between the Spars of the Upper Wing Center Section.

Now that the plywood fixture is in place and the bushings are properly spaced, proceed to fit the front and rear legs of the Cabane Struts to the bushings and the top longerons. After the fit is made, tack the streamline tubing in place. Remove the threaded rods and the plywood fixture, then replace the threaded rod in the bushings to hold their spacing of the bushings. Use washers and jamb nuts on each side of the bushings. You can now weld the Cabane Legs in place. After completing the welds, fit the diagonal member and weld it in place. Next, weld on the plates for the bolt on diagonal and construct the bolt in diagonal to fit. To flatten the streamline tubing at each end for the bolt in member, merely measure back 2½" from ends and flatten them with a leather or hard rubber mallet. After all leg and diagonal members have been installed, weld on the bushing re-inforcement plates. Now you can cut the threaded rod that holds the bushings. This makes it easier to remove the shorter pieces of threaded rod. After all the welding you will most likely find that the spacing between the bushings has closed about 1/8". Now is the time to get out the "Smoke Wrench" and bring the rear Cabane Legs back to their proper position. See Fig. 5 for the location of the spot to heat. The area shown on the rear Cabane Legs in Fig.5 should be heated to a dull red. Be sure to apply the same amount of heat (approx) to both rear Cabane Legs. Heat one rear leg and go immediately to the other rear leg and start heating. As you apply the heat from your torch, you will notice that the rear Cabane Leg will start moving forward (Due to expansion) When the welds cool off, the legs will start to move aft. It may be

neccessary to heat the areas involved 2 or 3 times in order to shrink the rear Cabane legs enough to establish the proper spacing between the bushings. Finish the job by once again running the 3/8" reamer through the bushings.

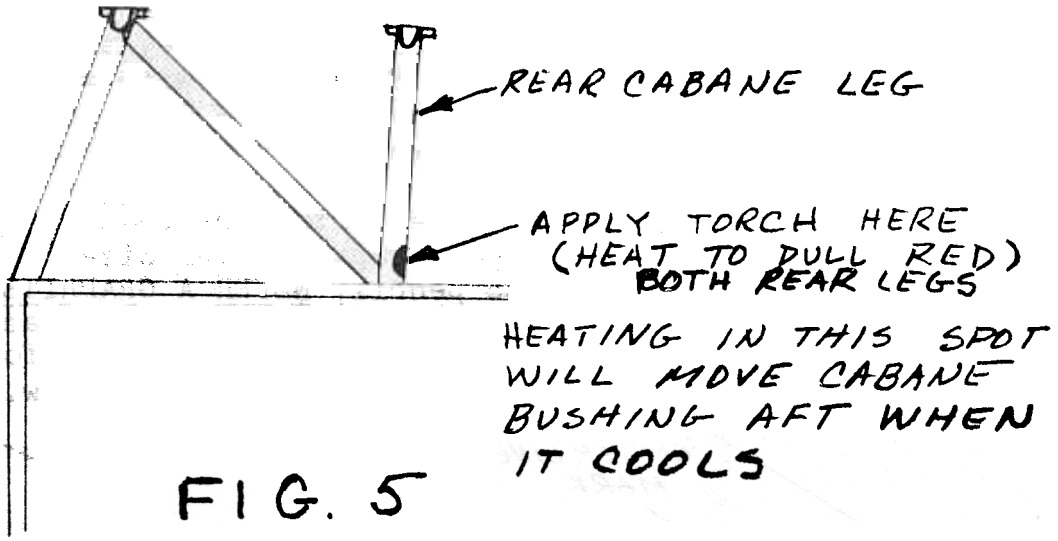

FIG. 5

WING LEADING EDGES

The Leading Edges are made from 2024-T3 x .020 Aluminum Sheet. This material is available in sheets both 36" wide and 48" wide. It is just as important to put the grain of the metal at right angles to the bend as it is when forming anyother piece of metal. The grain runs paralell with the long side of the sheet and also paralell to the printing on the sheet.

A full set of Leading edges consists of 13 pieces. We make 6 pcs. 15 5/8" x 36" for the lower wings. The Upper wings take 4 pcs. 15 5/8" x 48" , 2 pcs. 15 5/8" x 36" and 1 pc. 15 5/8" x 27". All of these measurements for length are a little longer than required. This leaves enough material for triming them for proper overlap at the wing ribs. On the lower wings we start at the root rib and fit the Leading Edge flush with this rib on the inboard side and trim it for an overhang of ½" on the outboard side of rib at Sta. 35¼. The next pc. of Leading edge starts ½" on the inboard side of Sta. 35¼ and extends to ½" outboard of Rib Sta. 68¼. On the Upper Wing we start at Rib Sta. 13 with a flush fit on the inboard side and the Leading Edge extends to ½" outboard of Rib Sta. 57 It will be necessary to trim both ends of the Upper Wing Leading Edge pieces so they match the sweepback angle of the ribs. The 27" Center Section piece goes on the Upper Wing last.

The reason that the Leading Edges are installed in 3 or 4 foot sections is to prevent distortion of the Leading Edges due to the difference in expansion co-efficients of the wood portions of the wing and the aluminum Leading Edge. Many people think that a 1 piece Leading Edge is the absolutely perfect way to install them. A warm summers day will shatter their dreams when they see their beautiful bird sitting on the flightline with warpped and distorted Leading. Add this problem to a High Density Altitude situation and you have a poor flying bird.

After you have cut out the pieces for the Leading Edges as described in the 2nd. paragraph (Blank Size), use a felt marking pen or grease pencil, NEVER A GRAPHITE PENCIL ON ALUMINUM and mark the centerline location at each end of the Leading Edge pieces. Also mark the sheets for the ¼" flange and the 15 degree bend. See Fig. 6 below.

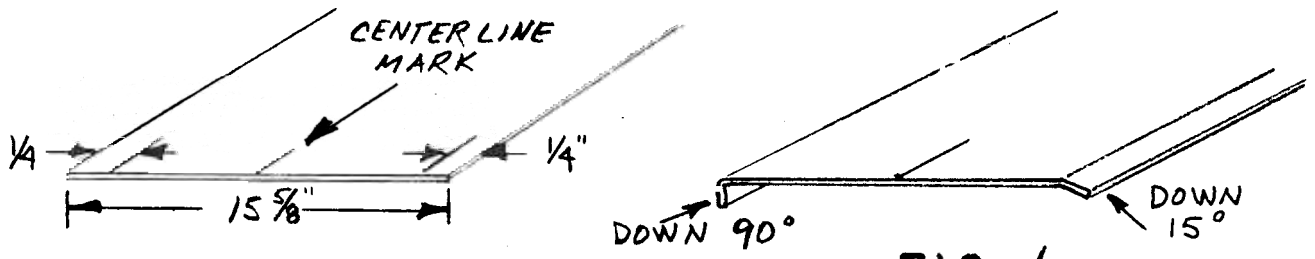

FIG. 6

DO NOT bend a ¼" flange or 15 degree flange on the Upper Wing Center Section piece.
To form the leading edge bend, see Fig. 7 It really is quite simple but it takes 2 people to do the job plus 2 boards 3/4" x 3½" x 54" Make sure the boards are smooth. Line one side of the boards with plastic shipping tape to prevent scratching the aluminum blanks we are about to form. To form the leading edge bend, both persons push

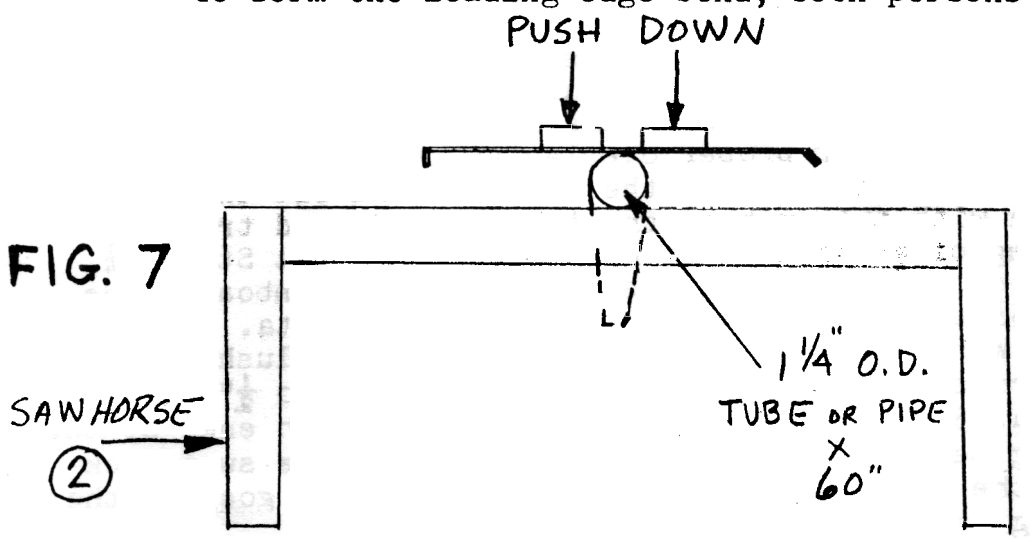

FIG. 7

downward evenly until the piece you are forming has assumed the position shown by the dotted lines in Fig. 7 All pieces are formed in this manner. The shape of the pieces after you remove the boards is all that we need. No other forming is neccessary.

When installing the Leading Edges on the wings, we start with the bottom side of the wing facing upwards. Assuming now that you have notched the edges where they pass over a rib and have trimmed them to proper length, we now mark the nail hole locations and drill them with a drill. The space between nails is approx. 3" Use #20 x 3/4" Cemented Coated Nails. The nails are driven through the bridge block and into the edge of the wing spar as shown in Fig. 8 After all pieces have been nailed to the bottom edge of the spar, turn the wing over. Using the installation tool also shown in Fig. 8 complete the nailing process in the top edge of the wing spar. The tool shown in Fig.8 is simple to make and results in glove tight application of the Leading Edge Skins. In making the tool, nail the Aluminum strip to the block with approx 12 nails through a scrap piece of 1/8" or 1/4" plywood. Before nailing the alum. strip to the handle, use a couple of small "C" clamps to hold the strip in place and test the tool for proper "CAM ACTION". This tool must be used with one precaution. It is possible to pull the Leading Edge Skins so tight, that you will make indentations in the skin with the nose of the ribs. Remember that before you install the Leading Edge Skins, they should be properly etched and coated with Yellow Zinc Chromate on the back sides of the skins only.A **very** light coat is all we need.

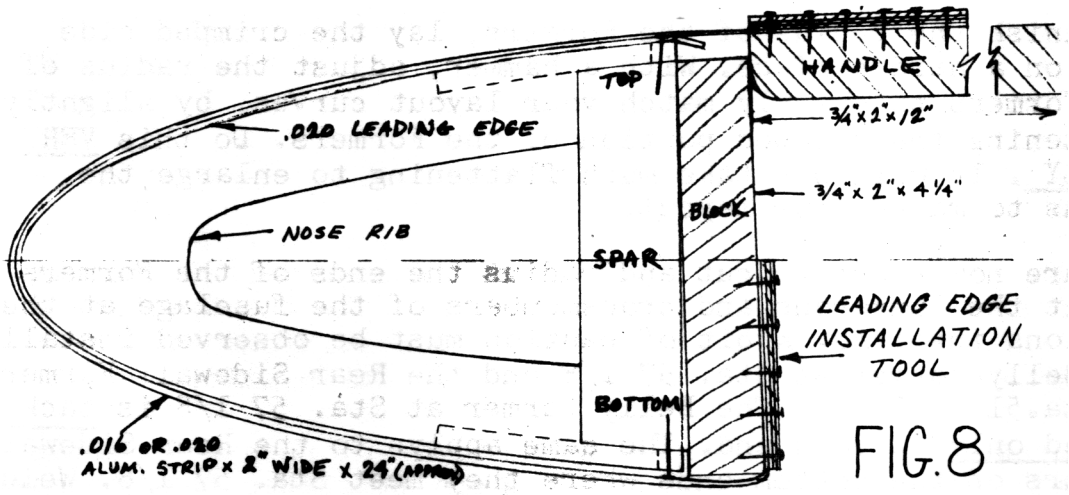

FIG.8

FUSELAGE AND TURTLEDECK FORMERS

The job of making Fuselage and Turtledeck Formers out of 3/8" x .035-4130 Tubing and welding Tabs on them for the sheet metal and stringer attachment seems simple enough. However, I have rarely seen a quality job using this type of construction. It ends up being a tedious bit of work to get everything involved to line up properly. I suggest that you consider using the construction method herein explained.

Check size of 1st bulkhead with one for double canopy.

Begin by laying out the radius of the formers involved on a piece of heavy cardboard. Use the dimensions shown on Sheet 13 of the plans to get the radius. A poor mans compass will expedite the job. See Fig. 9 The material that we use is 22 gauge (.029) cold rolled 1018 mild steel sheet 48" x 96" This same material is also used for the Coaming and Turtledeck Attach strips that are skip welded to the top longeron. From the full sheet of steel, shear 4 strips 1¼" x 96". Save these for the Attach Strips. Now cut about 14 or 15 strips across the grain, 1½" x 43". Trim these strips to 36" in length. Bend these strips lengthwise to produce 3/4" x 3/4" angles. Make the bend angle 93 degrees as in Fig. 10 Take these angles to a sheet metal shop and have them formed on a set of hand operated crimping rolls to a radius just slightly smaller than the radius you laved out on the cardboard. All most any sheet metal shop has a set of these rolls. The crimping machine operates like an old time Maytag washing machine wringer and will produce a corrugated pattern on the surface that is being crimped. As the machine operates it shrinks the surface and thereby curves the angle strips. Take the 1¼"x96" with you to the shop and have these strips bent to form a 90 degree flange on 1 edge, ¼" wide. SEE FIG. #10

To finish the radius of the Formers, lay the crimped side down on a hard surface. With a hammer, adjust the radius of the Formers to exactly match your layout curves, by slightly flattening the crimped portion of the Formers. Do this VERY GENTLY . It will not take much flattening to enlarge the radius to match your layout.

You are now ready to cut and radius the ends of the Formers to fit the longerons and crossmembers of the fuselage at the Stations involved. A bit of caution must be observed install- the Belly Former at Sta. 57 1/8 and the Rear Sidewall Formers at Sta.51 - 57 1/8 The Belly Former at Sta. 57 1/8 is tack welded only at each end. The same applys to the Rear Sidewall Formers on the bottom ends where they meet Sta. 57 1/8. Weld in the Stringer Stand-offs that attach to these 3 Formers so they will be held ridgidly in place. We can now break the tack welds loose and re-form the ends of the Formers involved as

shown in Fig.11 (Lower end of rear sidewall former is shown. Belly former is treated in the same manner at both ends) Fig. 12 shows the dimensions for re-forming.

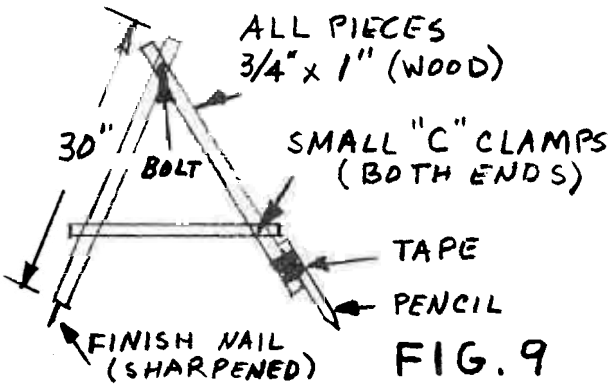

FIG. 9

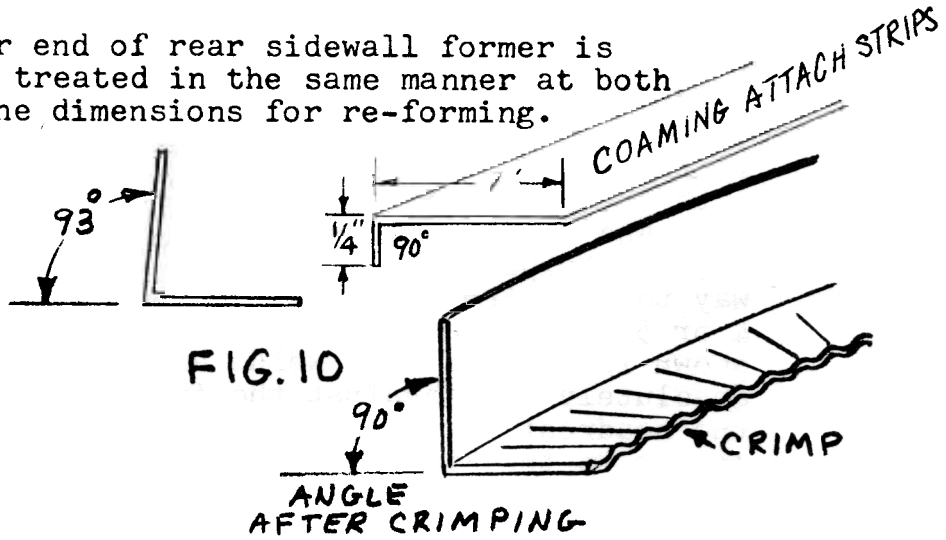

FIG. 10

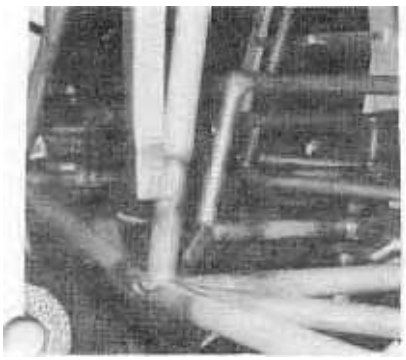

FIG. 11

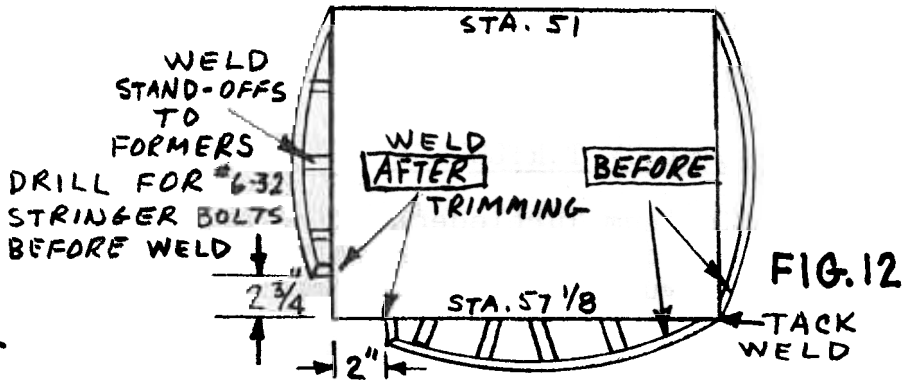

FIG. 12

The reason for trimming the Formers as shown in Fig. 11 and 12 is to allow enough room for welding on the Lower Wing Rear Spar fitting.

The Turtledeck Formers are made from 3 pieces of crimped angle. We need 2 for the headrest former. The 3 rd. piece is cut in half for the rear Turtledeck Former. The smooth edge of the Former flanges all point aft except the Belly Former located in front of the Bungee Truss which faces forward. After welding the Turtledeck Formers in place it will be neccessary to crimp the smooth surface of the Former Flange so that it conforms to the slope and taper of the Turtledeck. This will assure a glove tight fit of the Turtledeck to the Former without excessive gaps which would induce wrinkling of the Turtledeck skin. Fig. 13 shows how the pieces of the Turtledeck Formers are welded together. Fig. 14 shows the Headrest Former and the fitting of the Turtledeck Skin to it.

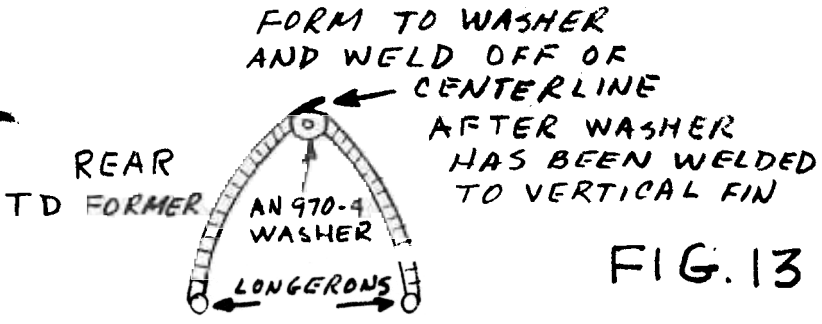

FIG. 13

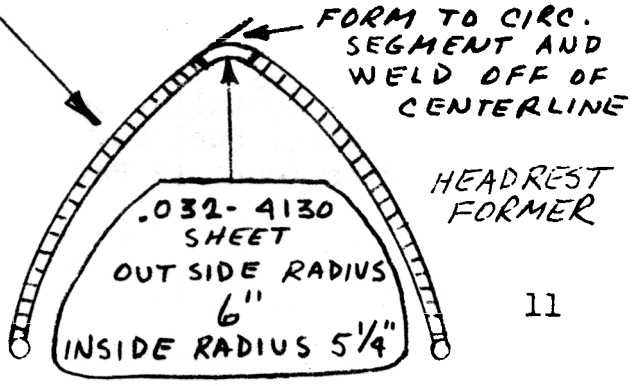

Now that the Fuselage and Turtledeck Formers have been welded in place it is time to attach the Coaming and Turtledeck Attach Strips to the Top Longerons as shown in Fig. 14 These are the pieces that you previously bent with the ¼" flange on them. The flange is on the lower edge and points toward the center of the fuselage. The Attach Strips start from the Tailpost and run all the way to the Firewall. They are skip welded approx. every 4 or 5 inches to the centerline of the top longerons as shown in Fig. 14 The welds are 5/8" long. The strips lay absolutely flat against the fuselage truss members from the headrest former back to the tail. From the headrest former to the Firewall they flare out to conform to the contour of the sidewall formers. Where they meet the sidewall formers, they are trimmed to fit against the formers and welded to same. The Attach Strips now provide a smooth surface on which to mount nut plates for coaming attachment or riveting as in the case of the Turtledeck.

ALUMINUM TURTLEDECK

Aluminum Turtledeck Skins are a lot easier to make than one made of wood. Their only real dis-advantage is that they are vunerable to the person who walks around with his "Head Up And Locked" and insists on leaning on aircraft turtledecks with his elbow.

The material is 2024-T3 x .025 It takes ½ sheet of material. To get our original pattern, I used dressmakers pattern paper. This pattern paper is the same as a Manila File Folder. After the pattern has been made we proceed to cut out the blank for the Turtledeck, allowing 1" extra in length at the Headrest Former for final trimming after we have made a plywood panel for the Headrest. To form the Turtledeck, you use the same technique as we do for the Wing Leading Edges. You can use a piece of heavy cardboard tubing, 4" in dia. to form the Headrest bend. To form the bend at the Rear Turtledeck Former, we use a piece of 3/4" tubing. The bottom edges of the Turtledeck have a 15 degree inwardly bent flange that is 3/16" wide. To secure the Turtledeck to the Formers and Attach Strip, we drill and dimple all holes for flush rivets. If you wish to provide a baggage compartment in side of the Turtledeck, merely install a ¼" plywood bulkhead with "L" brackets flush riveted to the Turtledeck Skin. Fig. 14 and 15 show how the Turtledeck is fitted to the fuselage.

COMING IN MAY

1. Bungee Installation Tool 2. Special Inverted Main Fuel Tank w/Elec. Fuel Level Sender 3. Smoke System 4. "I" Struts 5. Engine Mount (2 Parts)

ADS AND SWAPS

SKYBOLT JACKET PATCHES Now 2 for $5.00 Colorfully embroidered. Write to Sykes, 1107 Myrtlewood, Friendswood, Tex. 77546

PS-5C CARB FOR SALE Write to Janes E. Rogers 741 Rushville St., La Jolla, Calif. 92037

CASSUTT FOR SALE Asking $4500- Has O-200 Eng. Contact James A. Elton 16048 Mt. Carmel Ct. Fountain Valley, Calif. 92708 Willing to trade for Skybolt Parts 714-554-1909 DO NOT CALL COLLECT

STARFIRE AVIATION, INC.

Fuselage and Turtledeck Formers	$35 set
Aluminum Turtledecks	$75 ea.
Wing Leading Edges	$110 set
" Trailing Edges	$35 set

All SIZES OF STEEL TUBING FOR THE SKYBOLT. WRITE FOR PRICES. WE'RE COMPETITIVE

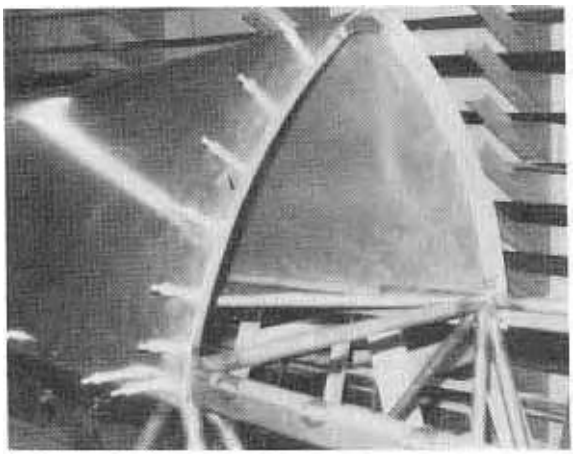

FIG. 14

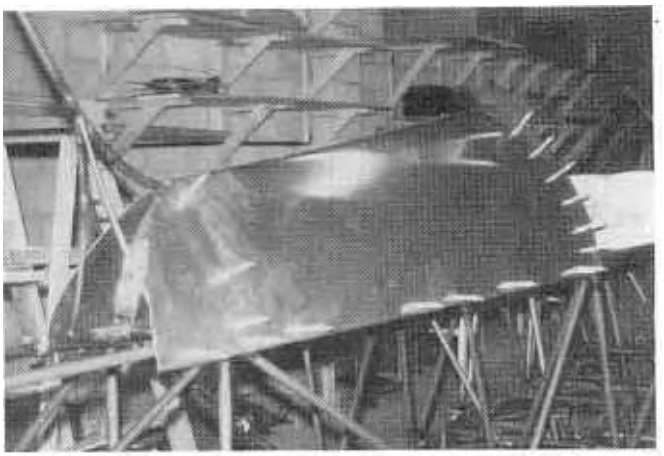

FIG. 15