SKYBOLT NEWS

910 S. HoHoKam DR. BLDG. 107
TEMPE, ARIZ. 85281
602-968-2556

OCTOBER 1977

FIRST CLASS MAIL

ELECTRICAL SYSTEM (CONTINUED)

The Elec. System Schematic in the last issue of Skybolt News is typical of the average light aircraft. It can of course be a lot more complicated than that which is shown in the Schematic. You could have many other electrical components such as another radio, auto-pilot, electrical instruments in place of vacuum operated, electrical elevator trim etc. However, I think that the Schematic will give you a place to start from which you can add the other circuits that might be neccessary in your particular aircraft.

***** I prefer to run all my electrical circuits on the right side of the airframe and all my mechanical and plumbing on the left side of the airframe. A convenient spot for the 12 V. copper bus bar is at the Station 57 1/8 vertical member. The Bus Bar should have an insulated cover of some type. It can be made of aluminum and lined on the inside with rubber. all wiring should have Ring Terminals crimped to it's ends. The Ring Terminal should be the proper size for both the bolt or screw it attachs to as well as the proper size for the wire it crimps to. After crimping a Ring Terminal, tug on it

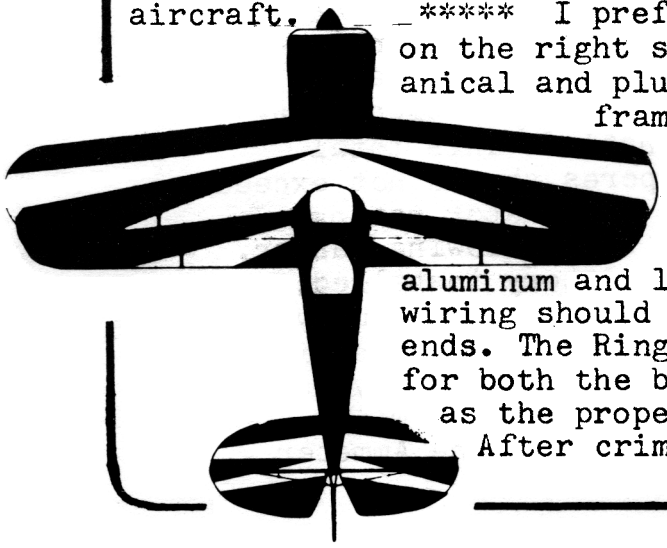

with a good pull to be sure that it is crimped tightly. NEVER SOLDER A TERMINAL TO THE END OF THE WIRE. YOU WILL WIND UP WITH A WIRE THAT WILL MOST LIKELY BREAK OFF DUE TO VIBRATION. ABOVE ALL ELSE, DO NOT USE SOLID CORE WIRE. USE FLEXIBLE,STRANDED AIRCRAFT WIRE ONLY.

By all means, draw a Schematic Wiring Diagram of your Skybolt and keep it in your service manual that you are preparing. Note on the Schematic Diagram, where the various components are located. Number the wires on the Schematic as well as recording the color code of the wire in question. As you install each wire in the aircraft, place a number on each end to correspond with the number as shown in the Schematic. You will certainly appreciate all of this precaution in the event that you have to trouble shoot a faulty elec. component in the future.

The flat rib stitching cord that we suggested in the covering supplies in the last issue of Skybolt News is an excellent cord to use for lacing the wire bundles. Shielded cable, ignition cable and cables which are not protected by a fuse or circuit breaker should be run or routed separately. A wire bundle should not be bent into a radius less that 10 times the diameter of the bundle. Cable bundles should be supported with non-metallic clamps at frequent intervals. Lacing may be used between the clamps but is not in itself adequate support for the bundle. Lacing is used only to keep the bundle confined. Where individual wires or bundles pass through bulkheads, a Grommet must be installed in the bulkhead to prevent chafing of the bundle. IN NO CASE SHOULD ELECTRICAL WIRING BE CLAMPED TO PLUMBING LINES WHICH CARRY FLAMMABLE FLUIDS OR VAPORS. SHOULD ARCING OCCUR IN SUCH AN INSTALLATION THE PLUMBING MAY BE PUNCTURED AND A SERIOUS FIRE COULD RESULT.

The electrical load of the total system is that which is in continous operation during cruise. The Radios, Transmitters(in standby) Nav. lights, Pitot heater, Instrument lights, Electrically driven instruments, and any other equipment that will be drawing continual electrical power is used in making that determination. This total electrical current requirement in amperes should not exceed 80 percent of the total generator or alternator rating. This total load may be determined in the following manner. With the engine off, a fully charged battery installed, we turn on all the equipment on our list of continously operated elec. components and observe the Ammeter reading. Do not operate the system any longer than neccessary as the battery will surely drain to a point that it will need re-charging before we can use it again. The Ammeter

that we use to make our test should not have an error of more than 2%. Next we add 10% to the ammeter reading we recorded. This will be the approx. continous cruise electrical load. This is strictly a "Rule Of Thumb" method and can only be used with a generating system that produces less than 2½ kw.

Regarding circuit protectors such as fuses or manual reset circuit breakers I would like to make the following clear to all builders. FUSES AND CIRCUIT BRAEKERS ARE INSTALLED IN THE SYSTEM FOR THE SOLE PURPOSE OF PROTECTING THE WIRING AND NOT THE ELECTRICAL COMPONENT THAT PARTICULAR WIRE SERVES. In FIG.1 we see a table for copper elec. cable current carrying capacity. In FIG.2 we see a table that shows the wire size a particular circuit breaker or fuse will protect.

Cable size—Specification MIL-W-5086	Single cable in free air—maximum amperes	Cable in conduit or bundled—maximum amperes	Maximum resistance—ohms/1,000 feet (20° C.)	Nominal conductor area—circular mils.	Finished cable weight—pounds per 1,000 feet
AN-20	11	7.5	10.25	1,119	5.6
AN-18	16	10	6.44	1,779	8.4
AN-16	22	13	4.76	2,409	10.8
AN-14	32	17	2.99	3,830	17.1
AN-12	41	23	1.88	6,088	25.0
AN-10	55	33	1.10	10,443	42.7
AN-8	73	46	.70	16,864	69.2
AN-6	101	60	.436	26,813	102.7
AN-4	135	80	.274	42,613	162.5
AN-2	181	100	.179	66,832	
AN-1	211	125	.146	81,807	
AN-0	245	150	.114	104,118	
AN-00	283	175	.090	133,665	482
AN-000	328	200	.072	167,332	620
AN-0000	380	225	.057	211,954	770

FIG. 1

CURRENT CARRYING CAPACITY OF COPPER ELEC. CABLE (MIL. SPECIFICATION MIL-W-5086)

NOTE: ALUM. ELEC. CABLE WILL CARRY APPOX. 20% LESS CURRENT THAN EQUIVALENT COPPER CABLE WIRE SIZE

Wire AN gage copper	Circuit breaker amp.	Fuse amp.
22	5	5
20	7.5	5
18	10	10
16	15	10
14	20	15
12	25(30)	20
10	35(40)	30
8	50	50
6	80	70
4	100	70
2	125	100
1		150
0		150

Figures in parentheses may be substituted where protectors of the indicated rating are not available.

CHART BASIS

1. Wire bundles in 135 degrees ambient (F.) at altitudes up to 30,000Ft.
2. Wire bundles of 15 or more wires, with wires carrying no more than 20% of the total current carrying capacity of the bundle as given in MIL-W-5088 (ASG)
3. Protectors in 75 to 85 degrees F. ambient
4. Copper wire per MIL-W-5086 (ASG)
5. Circuit breakers to MIL-C-5809
6. Fuses to MIL-F-15160

NOTE: YOU CAN USE A LOWER RATED FUSE OR CIRCUIT BREAKER THAN SHOWN ON THE CHART DEPENDING ON THE AMOUNT OF AMPERAGE A PARTICULAR ELEC. COMPONENT DRAWS

WIRE SIZE AND CIRCUIT PROTECTOR CHART

FIG. 2

You will notice in the Schematic Diagram (last issue) that there are 2 Silicon Diodes in the circuit. One goes from the battery side of the Master Solenoid to ground. The other goes from the Alternator Reg "S" terminal to ground. This is to prevent surging current when these circuits are opened or closed from damaging some types of transistorized radio circuits. They may be eliminated if your particular equipment does not require them. Ask your Electronics Dealer or Radio Shop.

To prevent elec. interference in your radio due to the electrical generating source, it may be neccessary to add a Capacitor (Condenser) in the circuit. Check with your Radio serviceman or dealer for the proper size. Ignition noise is another matter. In this instance, your radio serviceman will be the best source of help.

Please note in the Schematic Diagram (Last issue) that I have shown a shunt across the Ammeter. I have also shown a question mark along with it. Some Ammeters have a built in shunt while others do not. Those that do not have a built in shunt will require an external shunt wired across the Ammeter otherwise the Ammeter will be highly in-accurate and may burn out. Find out about this fact of life when you purchase your Ammeter. If the dealer can't tell you, DON'T BUY IT. Consult the manufacturer or buy a different Ammeter.

RUBBER RE-BOUND PADS FOR THE LANDING GEAR. MAKE EM' AT HOME

Word comes from Don Bequette, Rt. 1, Box 73, Cedar Hill, MO. 63016 one of our friendly Skybolt Builders that a product he has tried, may be the answer to your need for Rubber Blocks to be used as Re-Bound Pads on the L.G. It is called Devcon Flexane and is mfg. by Devcon Corp., Danvers, Mass. 01923 Phone 1-617-777-1100. Don has sent me a sample of the material (Flexane-80) and it seems to fill the bill perfectly. The density is 80 Durometer on the Shore "A" Scale. Don suggests that you order the liquid type. He indicates that the cost is $5.75 for a 1 pound kit. They also make Flexane in other densities from 30 on the Shore scale to 94. The chemical resistance of Flexane to oil is good but is un-acceptable for use a-round gasoline. Write to Devcon for their complete data regarding Flexane. It's available. Thanks Don.

FLIGHT CHARACTERISTICS OF THE SKYBOLT WITH 200HP. LYC. ENG. AND 2FT. CLIPPED OFF THE WINGSPAN

Those of you who were at Oshkosh this year were treated to an aerobatic show by Dick Blair and his Skybolt. Dick has kindly written an article for us Skybolt buffs. So, without further delay, I give you Dick Blair. A&P Mech., Flight Instructor and Airshow Pilot who built the third plans built Skybolt which first tested it's wings in 1973. His ship is powered by a Lyc. 200 HP., Fixed pitch prop. and a 22' wingspan. Dicks Skybolt was awarded "Best Sky-bolt" at Oshkosh 1973 and now has over 300 hours of Air-show and Sport flying. Dick tells his story this way.

" I would like to highlight some of the Skybolt flight and ground handling characteristics as found on my ship and other Skybolts I have flown. The speeds that I show were established by me thru flight testing. You may find, depending on weight, engine size and wing area that your ships best performance speeds will be slightly above or below mine. I have established 200 M.P.H. as my Red Line Speed (Vne) and 140 M.P.H. as my maneuvering Speed(Va). These limiting speeds must be established by the individ-ual builder for his airplane thru testing. In my case I Flutter Tested the the Skybolt to Vne plus 10% (220 M.P.H.) and did full control displacement tests to Va plus 10% (165 M.P.H.).

TAKE-OFF AND CLIMB

I raise the tail to a shallow climb attitude on normal take-offs for visibility and then squeeze it off at about 65M.P.H. On rough or soft fields I hold the elevator

slightly aft of neutral and let it fly off 3 point at about 55 M.P.H. With my ship, best angle of climb (Vx) is 65, best rate of climb (Vy) is 80 and I use 100 M.P.H. for cruise climb. On cross wind take-offs, I keep the elevators neutral until the tail comes up by itself. By then, the ailerons will be effective enough to put the wing down into the cross wind.

APPROACH AND LANDINGS

My normal approach speed is 90 M.P.H. even though the best glide speed is 80. I use this speed for over-the-nose visibility and as on all biplanes, the extra 10 M.P.H. kills very quickly. 90 M.P.H. will also give you excellent control for most wind conditions and 1500 to 1700 R.P.M. will give you a nice rate of descent. If the cross wind is strong or it is verygusty, I approach at 100 M.P.H. Short field approaches are planned for 75 over the fence but at this speed you have no visibility over the nose. I often skid a little or make a shallow circling approach under these conditions for added visibility.

My Skybolt landing gear is built to the original plans and if landed full stall will hit tail first. (Not always pretty or smooth) I normally let the ship touch down about 5 M.P.H. above stall where it will nicely three point. Although I can lock my brakes at any speed during roll out without fear of flipping, the ship will tend to skip if braked heavy above 45M.P.H. You have to stay with the rudder during roll out as with any taildragger but the landing is by no means tricky.

AEROBATICS

This is what the Skybolt is all about. Although the Skybolt is structurally sound, flys beautifully and has no bad habits, it does have all of the pitfalls of any aerobatic airplane. If flown improperly, it can accelerate and lose altitude incredibly fast. A well developed spin can also use up your altitude very quickly. I recommend that each beginner seek out competent dual aerobatic instruction and that pilots who do have acro proficiency approach aerobatics cautiously. Please adhere to the general safety recommendations for pre-flight, parachute and altitude.

This article is not intended to be a primer for aerobatics, there are too many good ones around. I just finished reading Neil William's "AEROBATICS" and it is outstanding. I will "Cook Book" one maneuver that the Skybolt does so easily that I use it with students as a confidence building maneuver. This is the Aileron Roll which the Skybolt

does with ailerons alone ie: There is no rudder or elevator applied during the roll.

1. Set up cruise power and trim.
2. Shallow dive to 140 M.P.H.
3. Raise nose to 20 degrees above horizon.
4. Apply full aileron.

If done by the numbers, the ship will smoothly roll zero "G" (No hanging in the belt) and end up with the nose on the horizon or slightly below. Common errors are:

1. Not raising the nose high enough (look off to the side for reference)
2. Not leaving the rudder and elevator neutral (Rudder with the roll and up elevator will both tend to drop your nose causing the roll to "Dish")
3. Not holding full aileron until the roll is completed

Spins are normal and predictable. A forward center of gravity as many Skybolts have, will cause a rapid low angle (nose down) spin which can be easily and quickly recovered. It is important for recovery that if you accidently spin with power on, immediately remove the power. Neutral ailerons are also recommended during recovery.

Here are the entry speeds that I use for the maneuvers listed.

	POSITIVE			NEGATIVE		
MANEUVER	MAX	BEST	MIN.	MAX.	BEST	MIN.
Slow Roll	160	140	120	---	---	---
Snap Roll	140	130	120	140	130	120
Loop	Vne	160	130	---	160	140
Barrel Roll	160	140	130	160	140	130
Hammerhead	Vne	150	120	---	150	130
Spin		Stall			Stall	
Knife Edge	160	140	110	---	---	---
Lomcevak	---	---	---	130	120	115
Emmelmann	Vne	160	155	---	160	160
Verticle Roll	Vne	180	180	---	---	---

CENTER OF GRAVITY

In conclusion, I'd like to talk a little about center of gravity. My Skybolt was initially quite nose heavy with the C.G. at 18% M.A.C. (2.5" forward of the lower wing leading edge). It was very stable and flew nicely thru

all general flying (T/O, Cruise, Landing) and also did beautiful slow rolls. For my purposes it was too stable. Most annoying to me was heavy elevator pressures (Especially inverted) and sloppy snap rolls. I moved the C.G. aft in increments until it reached 28.5% M.A.C. (2.3" aft of the lower wing leading edge before I was completely satisfied. I would be cautious of any loading that would put the C.G. aft of this point.

HAPPY FLYING
DICK BLAIR
RD-7 RIDGE RD.
VINCENTOWN, N.J. 08088

AUTHORS COMMENTS:

Be sure to make a C.G. LOADING CHART for your airplane and keep it in the aircraft at all times so that you can refer to it for all loading configurations.

The same comment applys regarding aerobatic entry speeds. Make a chart and post it in the aircraft where it can be easily read. DON'T TRY TO MEMORIZE ALL THE DATA CONCERNING YOUR SKYBOLT. Make charts and keep them handy before Murphy tries to get into the act and kicks you in the butt.

It may seem elementary but always be aware that a passenger moves the C.G. AFT as well as the "BURNING-OFF" of fuel loads.

Become proficient in the use of the Side-Slip but don't get caught on the back-side of the power curve in gusty air conditions. The diligent practice of good airmanship connected with all maneuvers will pay rewards in emergencies. Make every hour of flight time count while flying off those 50 hours for the Feds. Fly every hour with an objective.

WING COVERING (PART 2)

To proceed with the preparation of the wings prior to covering, have you given consideration to the attachment of metal or fiberglass fairings that you would like install at the lower wing root, "I" struts, flying and landing wire fittings and the aileron actuating links that connect the bellcranks to the ailerons ? Now is the time. Have you installed wood or alum. diagonal bracing to keep the fabric from pulling the inboard and outboard aileron ribs out of

alignment ? This also applys to the wing rib adjacent to the inboard aileron rib. If you are not installing a wing walk on the lower right wing, then you should also install bracing at the root rib. FIG. 3 shows the type of bracing we are talking about.

Regardless of whether you are using built-up wing ribs or have routed them out of plywood, they must be tied together with bridging tape (½" flat re-inforcing tape,cotton) that was called out in Part 1 of Wing Covering Supplies. This tape is installed as shown in FIG. 4 This keeps the wing ribs in alignment. The old CAA Manual CAM-18 states that Inter-rib bracing of conventional wing ribs shall run parallel to the spars and parallel to the surface of the cover. IT DOES NOT CRISS-CROSS BETWEEN UPPER CAPSTRIP AND LOWER CAPSTRIP AS MANY PEOPLE THINK OR DO.

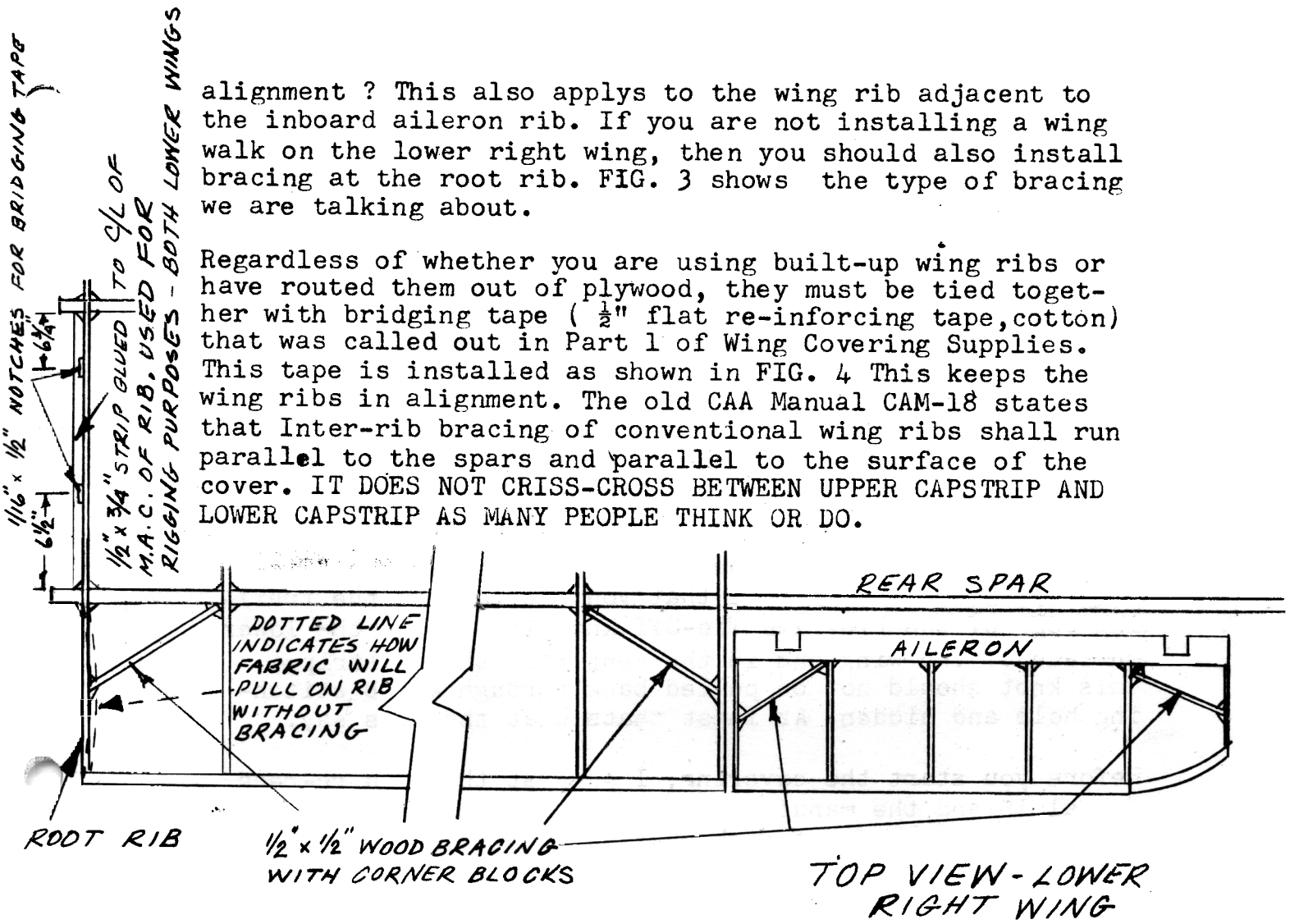

.032 - 2024 T3 ALUM. BENT INTO 1/2" x 1/2" x 1/2" CHANNEL CAN BE USED IN PLACE OF WOOD BRACING. ATTACH WITH #6-32 SCREWS, FLAT WASHERS AND AN365-632 NUTS

FIG. 3

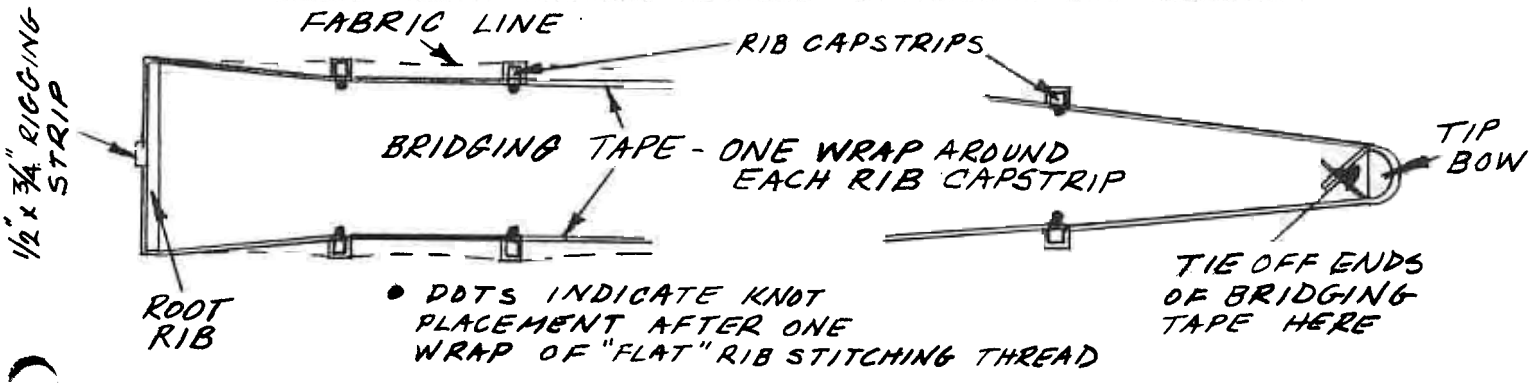

FIG. 4

END VIEW OF WING RIB CAPSTRIPS

In both Figures #3 and #4 you will notice that we show a ½"x 3/4" Rigging Strip glued to the inboard side of the lower wing root ribs. This was explained in the Jan. 1977 issue.

In FIG. 4 we show a"Black Dot" under the upper capstrips and above the lower capstrips. This "Dot" signifys the location of a knot after wrapping one turn of rib stitching cord around the bridging tape.

In regard to the bridging tape, many of you will say that all of this is going to make a lump under my fabric. The lump will be so small that you won't notice it. After all, you're going to install re-inforcing tape on top of the fabric, plus rib stitching plus surface tape. The tie-off stitch that you use on each end of the rib stitching proceedure will show more than the bridging tape. The "Tie-Off Knot" is the last knot that you tie towards the trailing edge of the rib. The Tie-Off knot is made on the lower surface of the wing and in the center of the capstrip. This knot should not be pulled back through a rib stitching hole and hidden. At least thats what the Feds say.

Before you start the covering, I suggest that you re-read Manual 18 and the manufacturers instruction book for the type of covering and finish that you may be applying. Another good manual to have on hand is the E.A.A. booklet called " Modern Aircraft Covering Techniques ". The price is $3.50 Postpaid.

A smooth leading edge is the name of the game on all airfoils, particularly the wings. To achieve this smoothness we start the covering process by covering the leading edge of the wing with cotton flannel. This will hide many imperfections such as the overlapping of the alum. leading edge pieces. The flannel is cemented and the other layers of covering material installed as outlined in FIG. 5

Extra care must be taken when applying the first coat of clear dope. The flannel will absorb a lot of dope. Consequently it must be thoroughly filled so that the weave is closed otherwise pinholes will develop when shooting the silver. These pinholes are caused by trapped air and are next to impossible to fill.

The covering technique that you use can be either the blanket method or the sewn envelope cover. On the skybolt, the

Sewn Envelope cover does not work too well for the wings since it is neccessary to sew panels of dacron together and the seams are difficult to hold in alignment with the ribs so they won't show. It would be nice if we could get fabric wide enough so that we would have only one seam along the trailing edge of the wing. I do however, prefer to make covers for the ailerons, horiz. stab., elevators and rudder. I also prefer to machine sew the leading edge of the vertical fin.

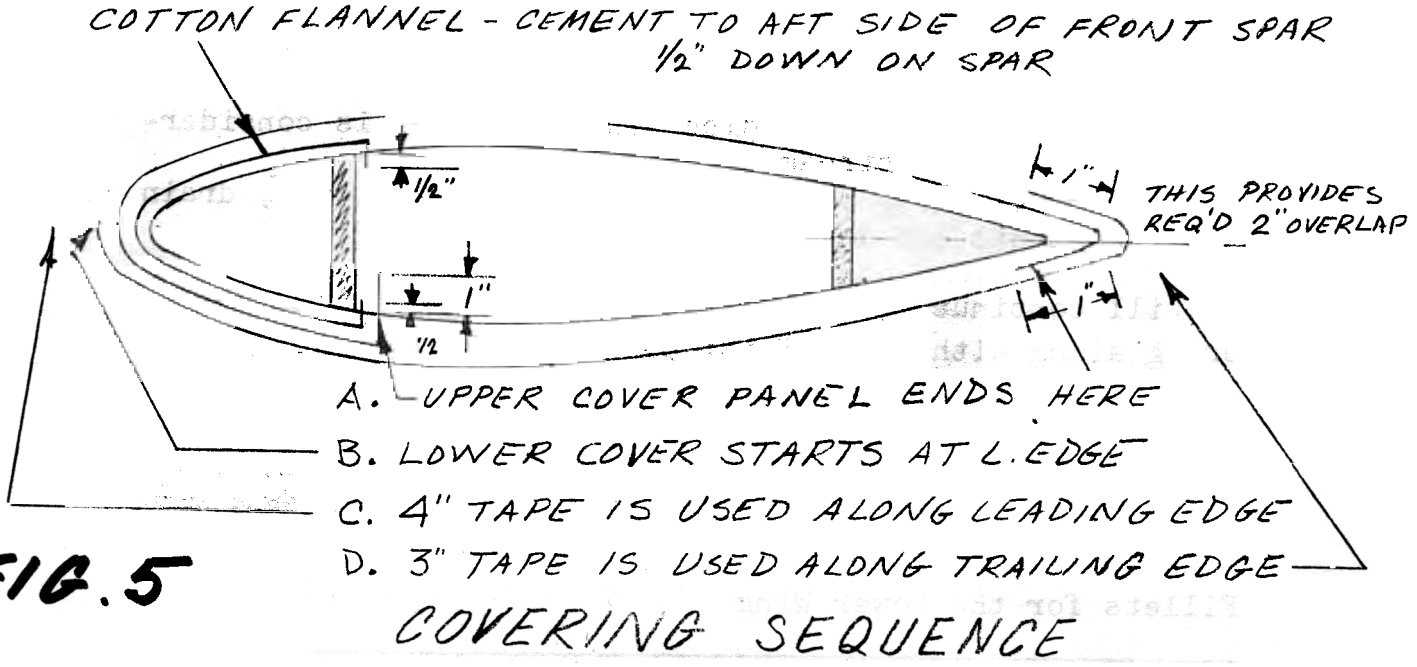

FIG. 5

The covering sequence is as follows.

1. Cement cotton flannel in place
2. Cement upper cover panel in place
3. Cement lower cover panel in place
4. Cut and fit fabric around aileron openings.
5. Cut , fit and cement in place, a single piece of fabric(the shape of the root rib) on the inboard side of the root rib.
6. Cut, fit and cement in place, a single piece of fabric along the trailing edge of the wing at the aileron cut out. Be sure that it is cemented securely. Attach the the metal retainer strips in place in this area after the last coat of silver. The retainer strips should be etched and primed with epoxy zinc chromate to prevent the finish coats from flaking off due to poor adhesion. See Page 3 of the Feb. 1977 issue for info on retainer strips.

7. Next comes the shrinking operation to remove slack and wrinkles. Refer to the mfg. instructions since some types of covers do not receive full tautening at this stage of the covering procedure..
8. In most cases the wing is now ready for the first brush or spray coat of dope. If dope is being used I prefer to brush on a coat of nitrate which has been thinned approx. 30%.
9. We are now ready to put on the filament type self adhesive re-inforcement tapes and proceed to rib stitch the cover to the ribs. The rib stitch spacing on the Skybolt should be 1½" in the slip stream areas and 2" outboard of the slip stream. The diameter of the prop disc plus 1 rib bay is considered the slip stream area.
10. The next step is to put on the surface tapes, drain grommets and inspection rings.

We will continue in the November issue, the subject of covering along with some of the DO'S and DON'TS.

COMING ATTRACTIONS IN THE NOVEMBER ISSUE OF SKYBOLT NEWS
1. Wing covering (Part 3) 2. Installing Wheel Pants
3. Seat Belt and Shoulder Harness Installation 4. Wing Fillets for the Lower Wing

---

Classified Ads and Swaps

For Sale** 2 IO-540 C4B5 Lyc. Removed from Aztec at 1968 hours but top overhauled at 1748 hours with new valves, pistons and rings. $3000 ea. with log books

For Sale * 2 IO-540 A1A5 Lyc. 290 H.P. Both damaged. $1500 for one and $1200 for the other*** Contact David H. Keaggy RD#2 Doris Dr., Girard, Pa. 16417

For Sale * 2 F-85 Alum. V-8 engines. One Turboed, one flywheel and two starters as removed from autos. You pick up $150.00 Call Taylors' Auto Body, Mastic, N.Y. 516-281-8030

HEAT TREATED LANDING GEAR BOLTS*** The Skybolt has problems with the front gear bolts bending under heavy loads. You can solve this problem with heat treated bolts. The 2 front bolts are the culprits. Order yours now from Firebolt Aircraft P.O. Box 28321, Tempe, Ariz. 85282 The price is $3.50 ea. Postpaid.